MAINE

# T-3416 T-3416L USA
# T-3416 BF USA

493034162

Lámpara de techo metálica suspendida de un cable textil. Luz directa. Difusor de metacrilato en parte inferior. Altura regulable.

Metallic pendant providing direct light. Bottom methacrylate diffuser. Textile electrical cable. Adjustable height.

960º

IP 20

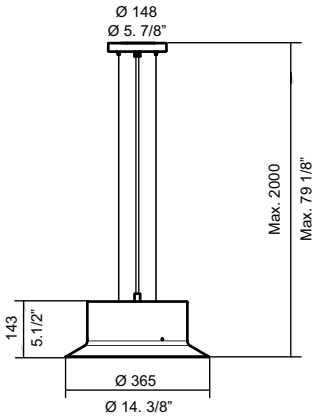


## UL 1598 ELECTRICAL INSTRUCTIONS FOR FLUSHMOUNTS, WALL SCONCES AND PENDANTS

SAVE THESE INSTRUCTIONS. MIN 90C SUPPLY CONDUCTORS. CAUTION-RISK OF FIRE. USE STATED WATT OR SMALLER. CAUTION-RISK OF SHOCK. DISCONNECT POWER BEFORE SERVICING. TO REDUCE THE RISK OF A BURN DURING RELAMPING, ALLOW THE BULB TO COOL DOWN. SUITABLE FOR DRY LOCATIONS ONLY. THIS PRODUCT MUST BE INSTALLED IN ACCORDANCE WITH THE APPLICABLE INSTALLATION CODE BY A PERSON FAMILIAR WITH THE CONSTRUCTION AND OPERATION OF THE PRODUCT AND THE HAZARD INVOLVED.

**WARNING:** ALL WIRES AND WIRE NUTS USED IN THE INSTALLATION MUST BE RATED 195F (90ºC). FOR INDOOR OR OUTDOOR USE (DAMP ONLY). THESE PRODUCT MUST BE INSTALLED BY A QUALIFIED ELECTRICIAN.

## Atención: / Warning:

No mirar directamente a los LED.
Do not look directly into any LED source
Bitte nicht direkt in die LED schauen
Ne regardez jamais les ampoules LED directement

## Instrucciones / *Assembly instructions*

1- Desenroscar i liberar los tornillos (A). Liberar la sujeción (B). Figura 1.

*1- Untighten and remove the screws (A). Remove the mounting bracket (B). Figure 1.*

1

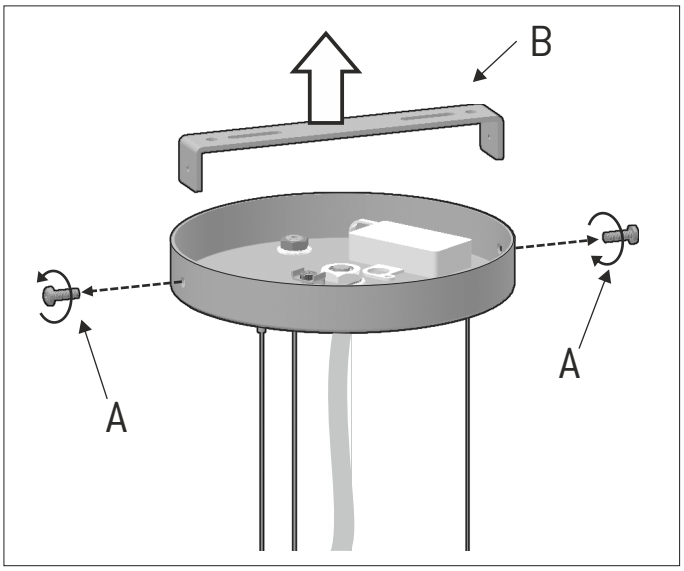


2- Atornillar la sujeción (B) al techo. Figura 2.

*2- Affix the mounting bracket (B) to the ceiling or to the electrical junction box. Figure 2.*

2

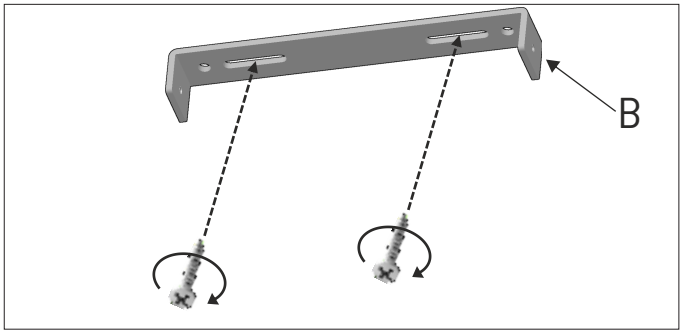


3- Desenroscar el tornillo (D) y pasar el cable eléctrico por el pasacables. Pasar los cables de acero por el pinza cables. Figura 3.

*3- Untighten the screw (D) and insert the electrical cord. Insert the steel cables through the cable holder. Figure 3.*

3

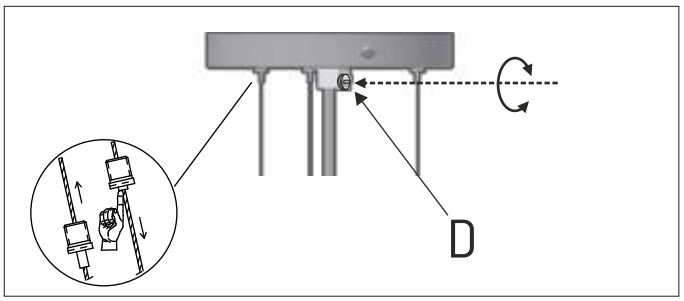

## Instrucciones / *Assembly instructions*

4- Realizar las conexiones eléctricas. Figura 4.

*4- Connect the electrical wires. Figure 4.*

4

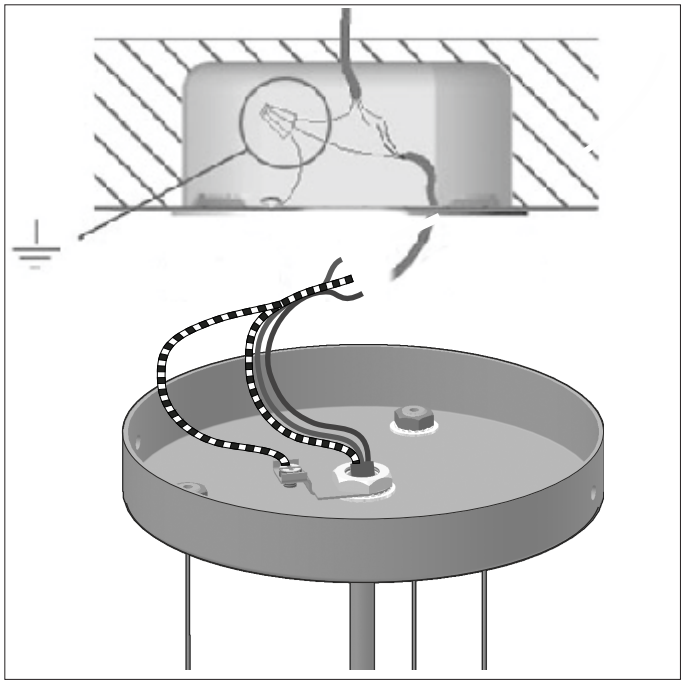

5- Acoplar la lámpara a la sujeción (B). Enroscar los tornillos (A) liberados previamente. Figura 5.

*5- Attach the pendant to the mounting bracket (B). Tighten the screws (A) removed previously. Figure 5.*

5

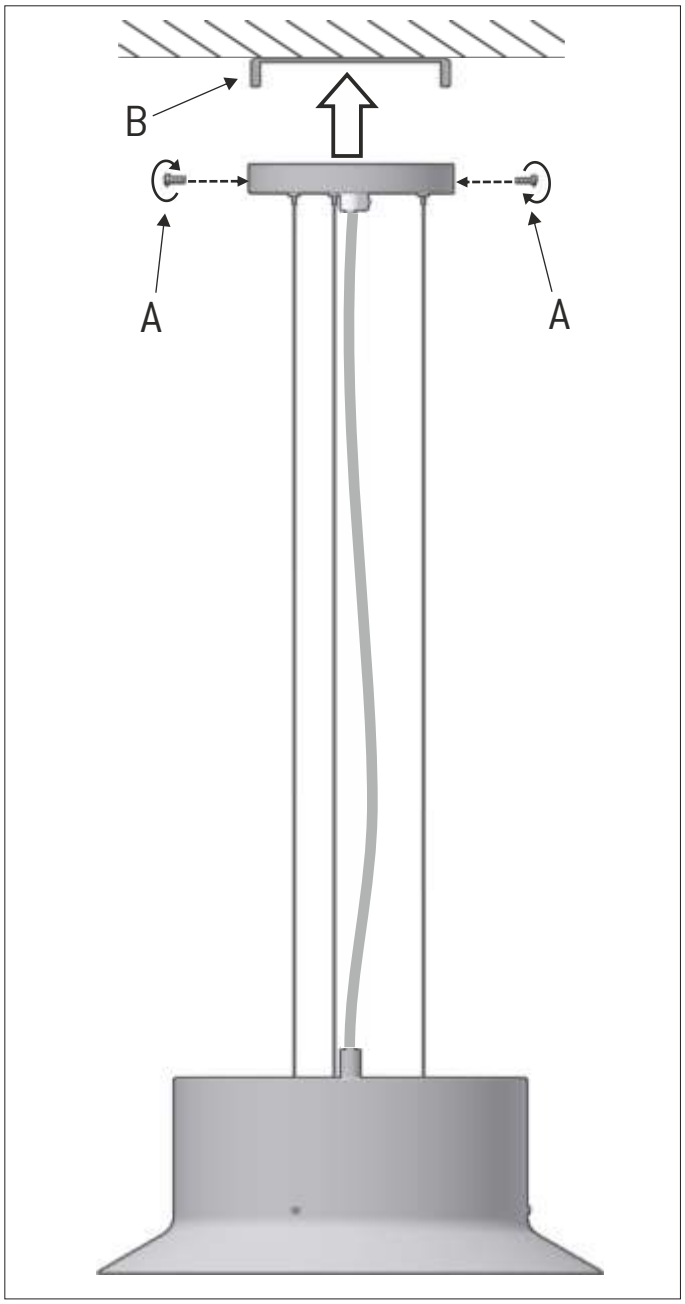

6- Desenroscar el tornillo (D) para ajustar la altura del cable eléctrico. Una vez conseguida la longitud deseada, fijar el cable enroscando de nuevo el tornillo (D). Nivelar la lámpara a la altura deseada desplazando los cables de acero. Ver funcionamiento de los pinzacables en la nota que se adjunta a continuación. Figura 6.

*6- To adjust the height of the electrical cord, untighten the screw (D). Once you have the desired level, set the height by tightening again the screw (D). To adjust the height of the pendant move the steel cables up and down. See remarks below. Figure 6.*

6

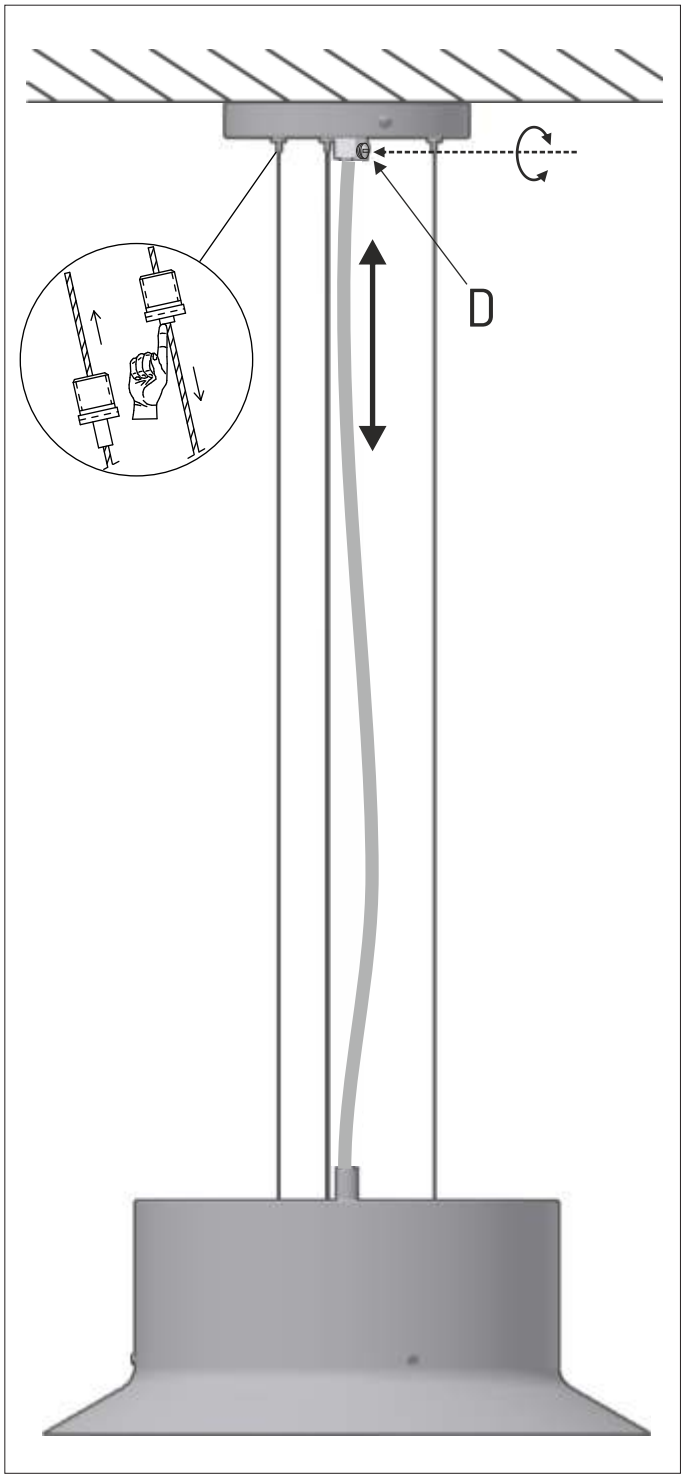


**NOTAS / *REMARKS***

FUNCIONAMIENTO PINZA-CABLES
Para conseguir menos longitud de cable tirar el cable hacia arriba y para aumentarla presionar el mecanismo del pinza-cables. Manteniendo el mecanismo presionado, el cable se mueve libremente. Cuando se ha conseguido la longitud deseada, soltar el mecanismo y el cable queda fijo. Es aconsejable sujetar el cable con la otra mano para evitar una caída brusca de la lámpara.

*TO ADJUST THE LENGHT OF THE CABLES*
*To shorten the cable push the cable upwards, to lengthen the cable press the small knob of the cable holder upwards. When the knob is pressed upward, the cable will be released for adjustment. When the knob is released, the cable is again secured. We recommend to hold the cable with the other hand to avoid the lamp falling down abruptly.*

7- Quitar el film protector del metacrilato (G). Figura 7.

*7- Remove the protective film from methacrylate (G). Figure 7.*

7

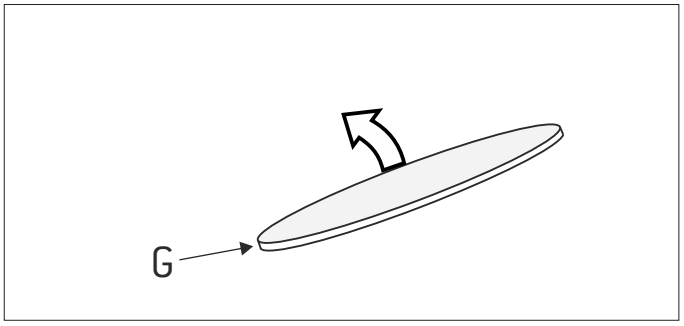

## Instrucciones / *Assembly instructions*

8- Desenroscar y liberar uno de los botones adorno de la pantalla (E) junto con su correspondiente tornillo (F). **(MODELO T-3416 and T-3416BF** Colocar las bombillas). Figura 8.

*8- Untighten and remove one of the knobs (E) and its screw (F).* ***(MODEL T-3416 and T-3416BF*** *Insert the light bulbs) . Figure 8.*

8

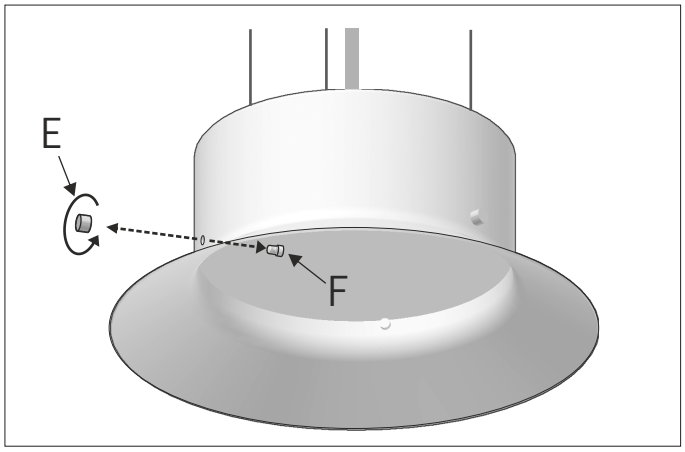


9- Ligeramente inclinado, colocar el metacrilato (G) por encima de los tornillos. Figura 9.

*9- Slightly tilted, put the methacrylate (G) in place above the screws. Figure 9.*

9

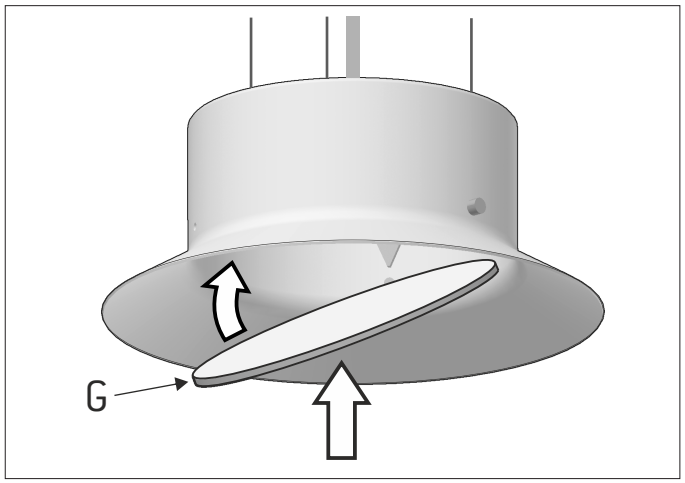


10- Colocar de nuevo el tornillo (B) y enroscarlo con el botón adorno (A) liberado previamente. Figura 10.

*10- Put the screw (B) back in place and handtighten it with the knob (A) removed previously. Figure 10.*
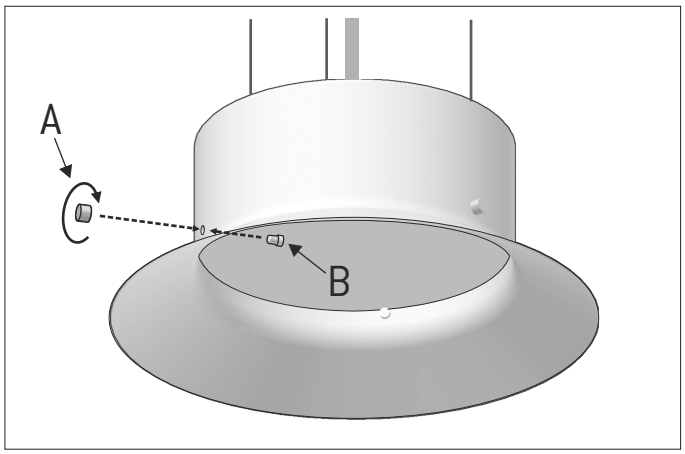
10