MAINE

estiluz

T-3415 LED USA 493034152

Lámpara de techo metálica suspendida de un cable textil. Luz directa. Difusor de metacrilato en parte inferior. Altura regulable.

Metallic pendant providing direct light. Bottom methacrylate diffuser. Textile electrical cable. Adjustable height.

960º

IP 20

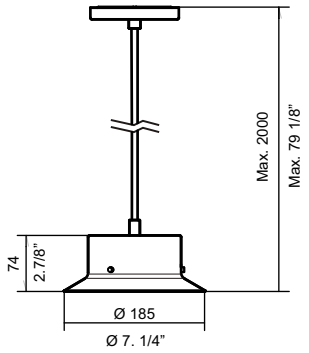

UL 1598 ELECTRICAL INSTRUCTIONS FOR FLUSHMOUNTS, WALL SCONCES AND PENDANTS

SAVE THESE INSTRUCTIONS. MIN 90C SUPPLY CONDUCTORS. CAUTIO N-RISK OF FIRE. USE STATED WATT OR SMALLER. CAUTION-RISK OF SHOCK. DISCONNECT POWER BEFORE SERVICING. TO REDUCE THE RIS K OF A BURN DURING RELAMPING, ALLOW THE BULB TO COOL DOWN. SUITABLE FOR DRY LOCATIONS ONLY. THIS PRODUCT MUST BE INSTALLED IN ACCORDANCE WITH THE APPLICABLE INSTALLATION CODE BY A PERSON FAMILIAR WITH THE CONSTRUCTION AND OPE RATION OF THE PRODUCT AND THE HAZARD INVOLVED.

WARNING: ALL WIRES AND WIRE NUTS USED IN THE INSTALLATION MUST BE RATED 195F (90ºC). FOR INDOOR USE ONLY. THESE PRODUCT MUST BE INSTALLED BY A QUALIFIED ELECTRICIAN.

Atención: / Warning:

No mirar directamente a los LED.
Do not look directly into any LED source
Bitte nicht direkt in die LED schauen
Ne regardez jamais les ampoules LED directement

Instrucciones / *Assembly instructions*

1- Desenroscar el espárrago allen (A). Liberar la sujeción (B). Figura 1.

1- Untighten the allen screw (A). Remove the mounting bracket (B). Figure 1.

1

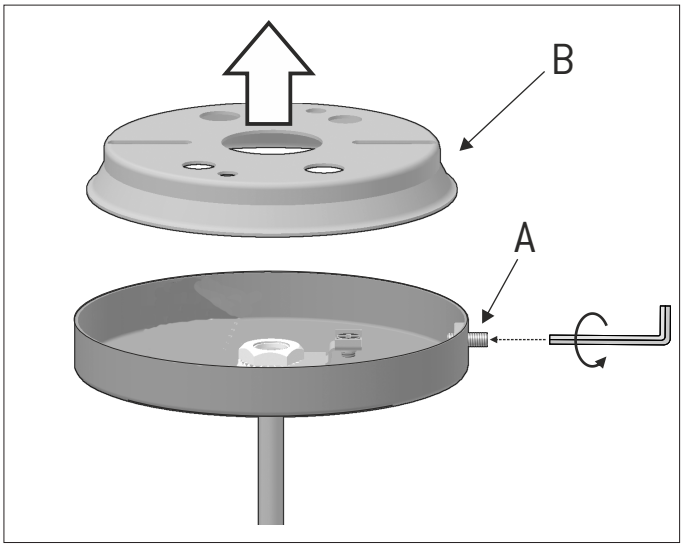

2- Introducir los cables de red por el orificio previsto. Realizar las conexiones eléctricas asegurándose de conectar el cable tierra en el lugar correspondiente.. Figura 2.

2- Insert the electrical wires through the central hole. Connect the electrical wires making sure to have connected the ground wire correctly. Figure 2.

2

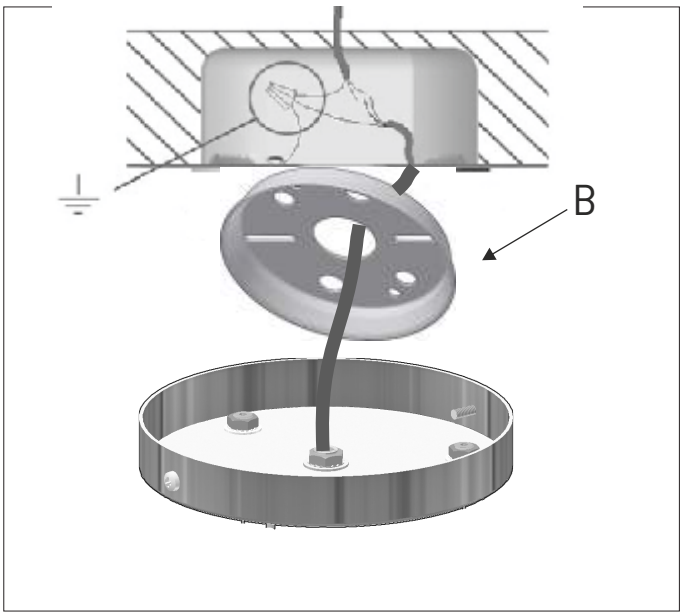

3- Atornillar la sujeción (B) . Figura 3.

3- Affix the mounting bracket (B). Figure 3.

3

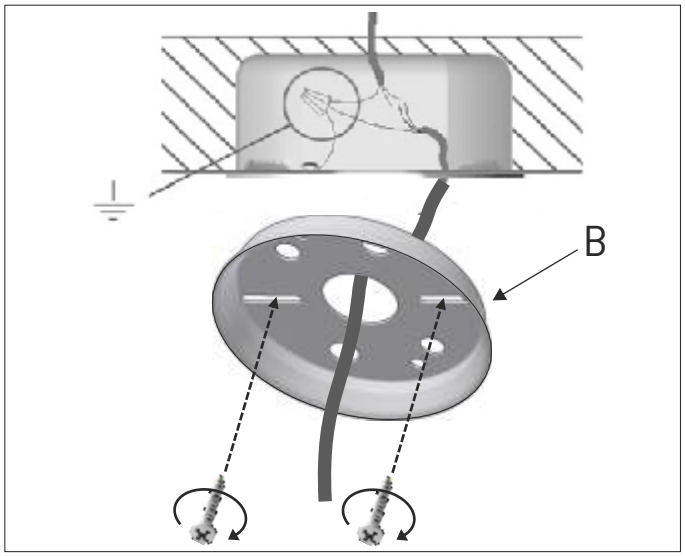

4- Acoplar la lampara a la sujeción (B). Ensroscar el esparrago allen (A) desenroscado previamente. Figura 4.

4-Attach the fixture to the mounting bracket (B). Tighten the allen screw (A) removed previously. Figure 4.

4

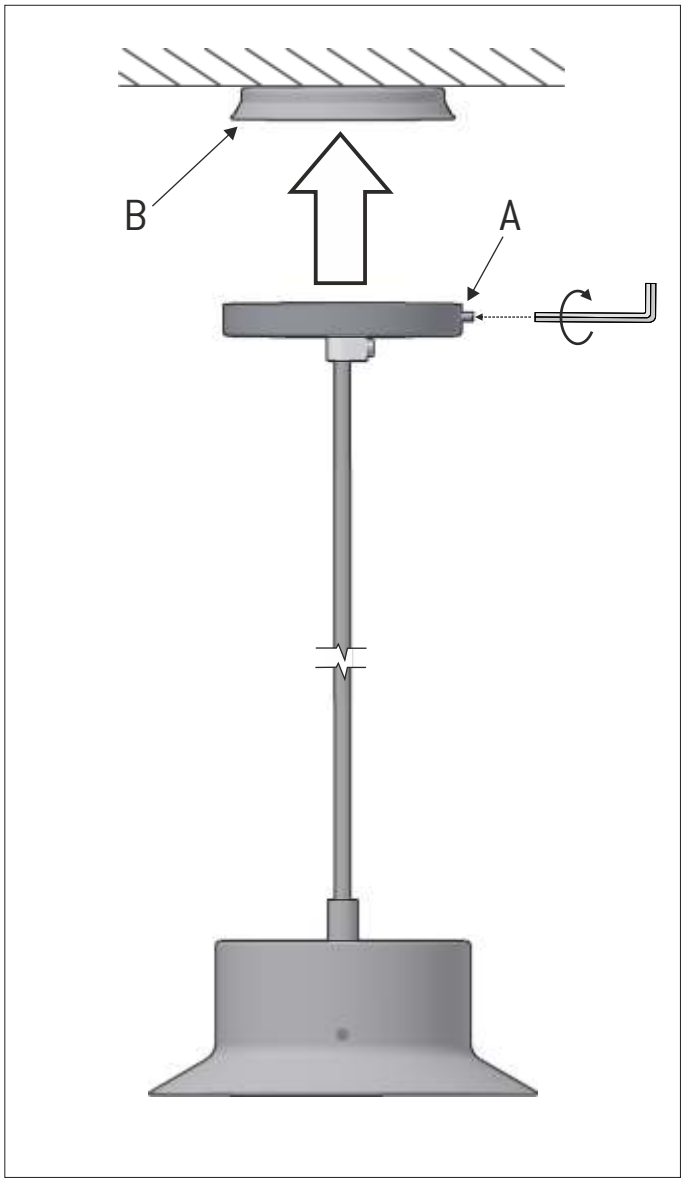

5- Para regular la altura, desenroscar el tornillo (D) y ajustar el cable. Una vez conseguida la longitud deseada, fijar la lámpara enroscando de nuevo el tornillo (D). Figura 5.

5- To adjust the height, untighten the screw (D) and adjust the cable. Once you have the desired level, set the height by tightening again the screw (D). Figure 5.

5

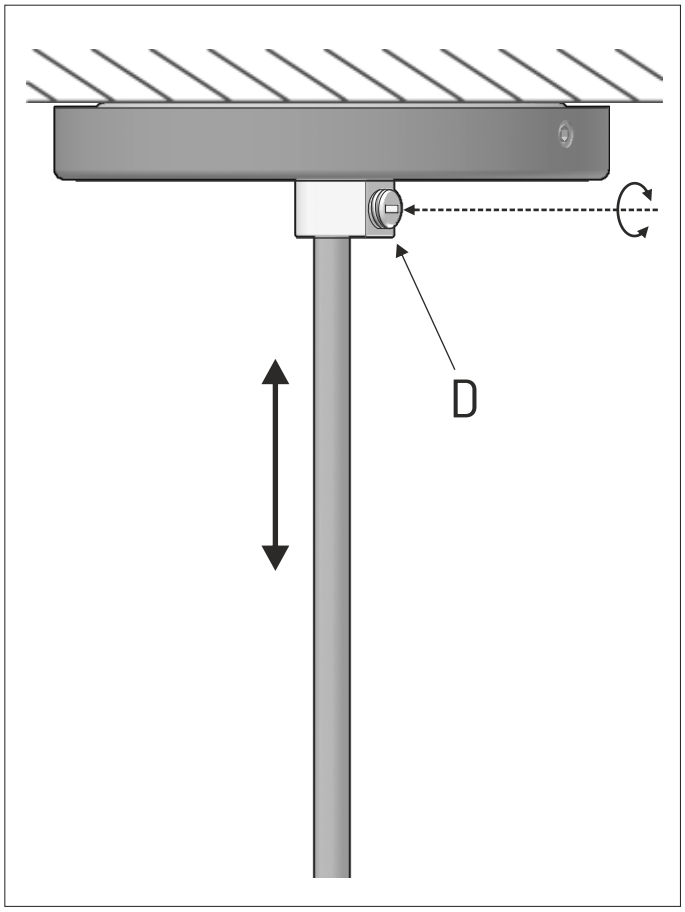

6- Quitar el film protector del metacrilato (G). Figura 6.

6- Remove the protective film from methacrylate (G). Figure 6.

6

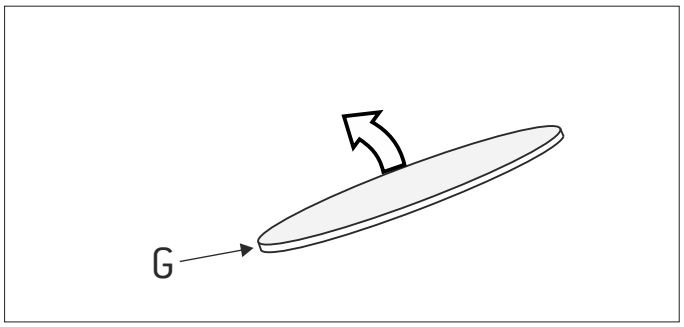

7- Desenroscar y liberar uno de los botones adorno de la pantalla (E) junto con su correspondiente tornillo (F). Figura 7.

7- Untighten and remove one of the knobs (E) and its screw (F). Figure 7.

7

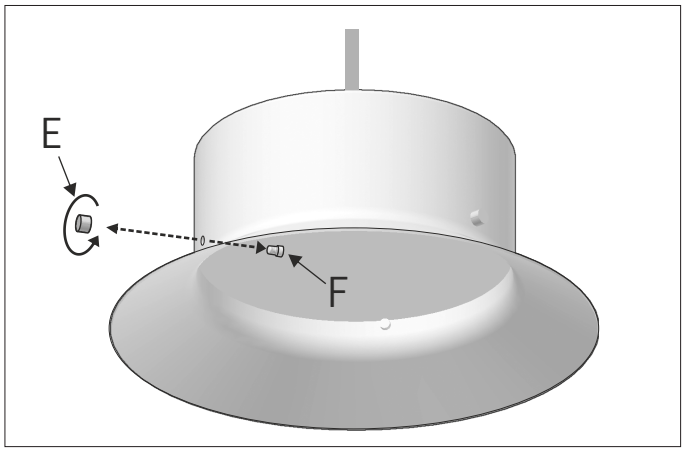

8- Ligeramente inclinado, colocar el metacrilato (G) por encima de los tornillos. Figura 8.

8- Slightly tilted, put the methacrylate (G) in place above the screws. Figure 8.

8

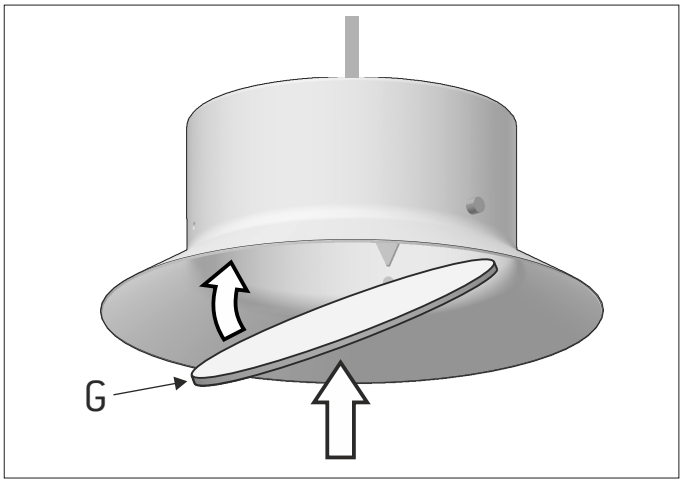

9- Colocar de nuevo el tornillo (B) y enroscarlo con el botón adorno (A) liberado previamente. Figura 9.

9- Put the screw (B) back in place and handtighten it with the knob (A) removed previously. Figure 9.
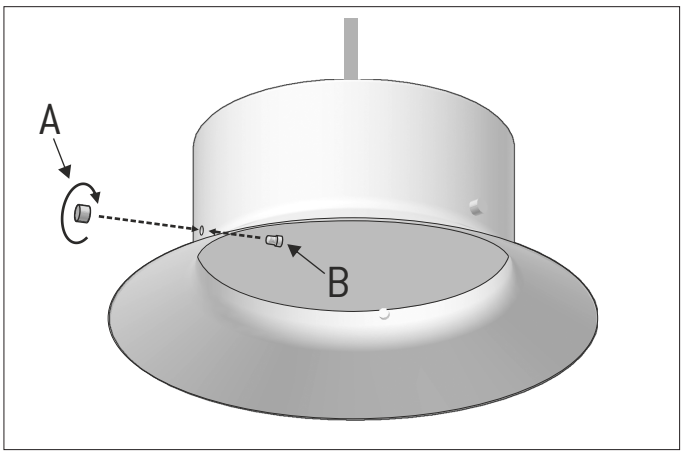
9