Roll & Hill

32 33rd Street, Unit 10, Brooklyn, NY 11232
T +1 718 387 6132 F +1 718 387 6104
www.rollandhill.com

CONTENTS

Agnes 14 Chandelier

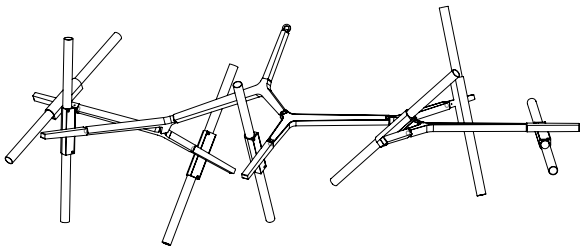

Crossbar

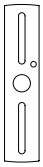

Canopy

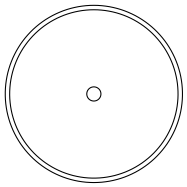

1/4 IPS Nipple

#8-32 Screws (2)

Screw Collar

Hook (2)

Bulbs (14)

Incandescent 120V (bulbs included)
Incandescent 240V (bulbs not included)

Halogen 120V (bulbs included)
Halogen 240V (bulbs not included)

LED 120V (bulbs included)
LED 240V (bulbs not included)

Stem

Glass Tubes (14)

SAFETY INFORMATION

Only one light bulb per socket.
Only suitable for direct mounting on non-combustible surfaces.
Under no circumstances can Agnes Chandeliers be mounted on normally flammable surfaces.
Suitable for dry, indoor use only.
Maximum ambient temperatures: 25° C

Roll & Hill

32 33rd Street, Unit 10, Brooklyn, NY 11232
T +1 718 387 6132 F +1 718 387 6104
www.rollandhill.com

CEILING INSTALLATION | AGNES

Note: Please contact a licensed electrician.
Note: Do not use bulbs that exceed 25 watts.

1. To customize the length of the provided 36-inch stem, you may cut to desired length. Then cut the inner all-thread tube to the same length plus 1/2 inch to allow room for threading. Thread the hooks back on to either end of the stem.

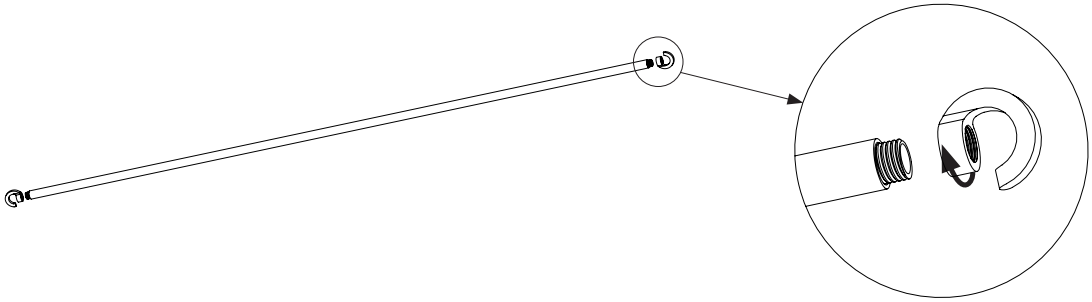

2. Attach the stem (A) to the lighting fixture (B)using the hook and loop. Feed the black lead wire (C) up from the fixture through the stem.

3. Slide the hangstraight nut (D) and then the canopy (E) onto the stem.

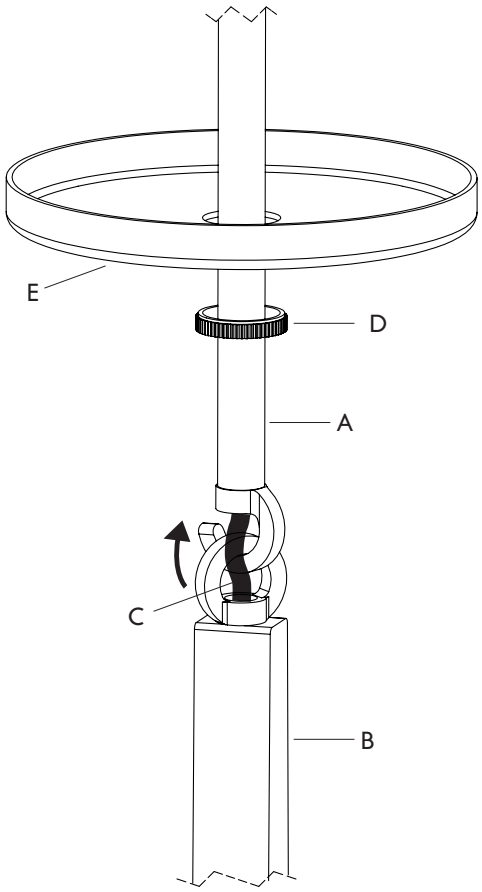

Roll & Hill

32 33rd Street, Unit 10, Brooklyn, NY 11232
T +1 718 387 6132 F +1 718 387 6104
www.rollandhill.com

CEILING INSTALLATION | AGNES

4. Install the crossbar using #8-32 screws to junction box (F). It is recommended to pull the main wires out so they are accessible while making the main connection later (G).

5. Once the crossbar is secure, screw the 1/4 IPS nipple into the hangstraight and then into the crossbar.

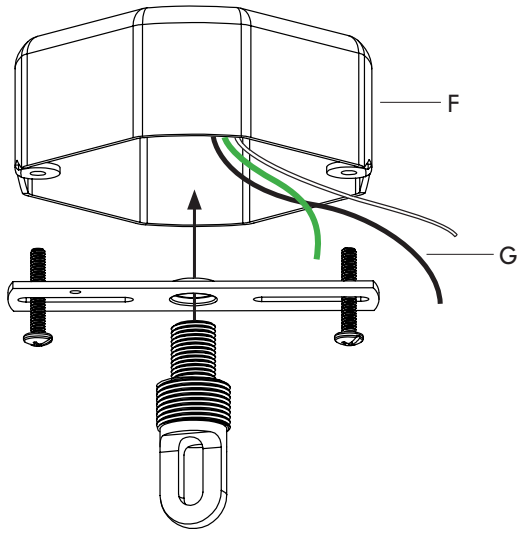

6. Carefully lift the fixture and secure the opposite hook on the stem to the hangstraight loop (H). Note that the hangstraight nut and canopy are not attached at this point and hang below the junction box connection. This will allow you to make the lead connections.

7. Once the fixture is secured to the hangstraight, guide the lead from the stem through the hangstraight into the junction box (I). Strip the wires and make the connections to the leads in the ceiling (J). Attach the green ground wire to the crossbar with the ground screw (K).

8. Tuck the connected wires into the junction box and raise the canopy and hangstraight nut. Thread the nut onto the hangstraight, tightening the canopy flush to the ceiling.

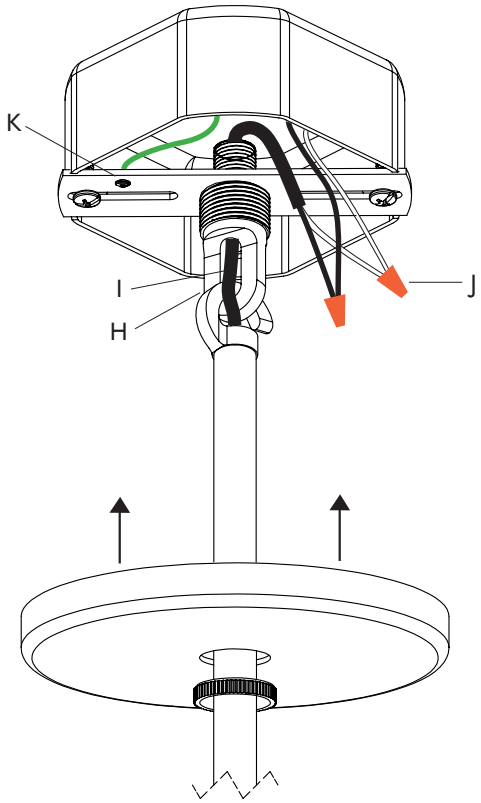

Roll & Hill

32 33rd Street, Unit 10, Brooklyn, NY 11232
T +1 718 387 6132 F +1 718 387 6104
www.rollandhill.com

ROTATING THE TIPS | AGNES

Note: Make sure to power off fixture and allow bulbs and metal arms to cool.

1. To change angle of the glass (A), hold fixture steady by gripping the Y Body (B) with one hand, and carefully rotate the Tip (C) with the other. The tip rotates up to 270°.

2. For further adjustment, hold the tip steady with one hand and carefully twist the cup (D) with the other. The cup rotates up to 90°.

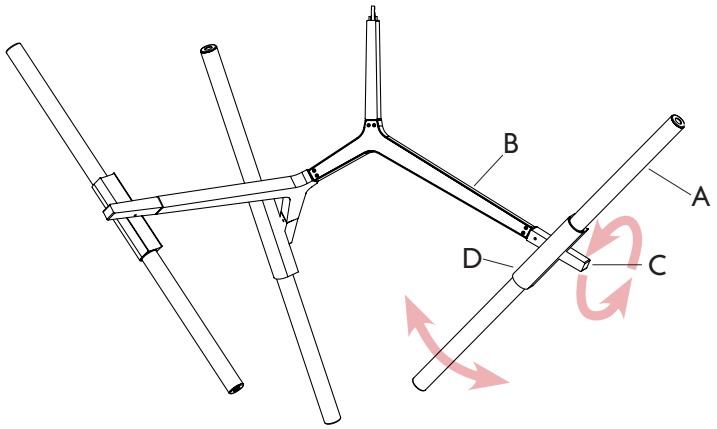

CHANGING THE BULBS | AGNES

Note: Make sure to power off fixture and allow bulbs and metal arms to cool.

1. Carefully unscrew glass (A) from metal cups (D) in counterclockwise direction.

For G9 Halogen and LED Bulbs:
2. Pull the bulb out of the socket and replace.
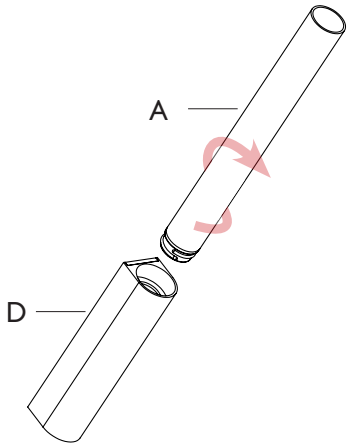
For Incandescent Bulbs:
2. Carefully unscrew bulb and replace.